3900 Series Hydronic Electric Baseboard Heater

- Permanent mount self contained unit.
- Heating elements are immersed in a heat transferring liquid enclosed by a Copper tube casing with Aluminum fins.
- Powder coated 12 gauge heavy duty extruded Aluminum housing with junction boxes located on each end of the unit.
- Automatic linear limit.
- Wire guard extends along the entire outlet area of the baseboard.
- Commercial Brown unit has in-built wireway.
- Special colors available, consult factory.
- Suitable for high altitude applications.
- 1 Year element warranty.
- Made in U.S.A.

Standard Models

STANDARD WHITE		COMMERCIAL BROWN		WATTS	BTUs	VOLTS	AMPS	HEATER LENGTH (IN.)	WT. (LBS)
MFG CATALOG NUMBER	MFG MODEL NUMBER	MFG CATALOG NUMBER	MFG MODEL NUMBER						
01114102	E3904-28	01116402	E3904-28C	400	1360	120	3.3	28	16
01114202	F3904-28	01116502	F3904-28C	400	1360	208	1.92		
01114302	H3904-28	01116602	H3904-28C	400/300	1360/1024	240/208	1.6/1.4		
01114402	G3904-28	01116702	G3904-28C	400/300	1360	277/240	1.4		
01114502	E3906-36	01116802	E3906-36C	600	2048	120	5	36	22
01114602	F3906-36	01116902	F3906-36C	600	2048	208	2.9		
01114702	H3906-36	01117002	H3906-36C	600/450	2048/1536	240/208	2.5/2.2		
01114802	G3906-36	01117102	G3906-36C	600/450	2048	277/240	2.2		
01114902	E3910-48	01117202	E3910-48C	1000	3413	120	8.3	48	27
01115002	F3910-48	01117302	F3910-48C	1000	3413	208	4.8		
01115102	H3910-48	01117402	H3910-48C	1000/750	3413/2560	240/208	4.2/3.6		
01115202	G3910-48	01117502	G3910-48C	1000/750	3413	277/240	3.6		
01115302	E3912-60	01117602	E3912-60C	1250	4265	120	10.4	60	33
01115402	F3912-60	01117702	F3912-60C	1250	4265	208	6		
01115502	H3912-60	01117802	H3912-60C	1250/938	4265/3201	240/208	5.2/4.5		
01115602	G3912-60	01117902	G3912-60C	1250/938	4265	277/240	3.6		
01115702	E3915-72	01118002	E3915-72C	1500	5100	120	12.5	72	41
01115802	F3915-72	01118102	F3915-72C	1500	5100	208	7.2		
01115902	H3915-72	01118202	H3915-72C	1500/1125	5100/3825	240/208	6.3/5.4		
01116002	G3915-72	01118302	G3915-72C	1500/1125	5100	277/240	5.4		
01116102	F3920-96	01118402	F3920-96C	2000	6826	208	9.6	96	58
01116202	H3920-96	01118502	H3920-96C	2000/1500	6826/5100	240/208	8.3/7.2		
01116302	G3920-96	01118602	G3920-96C	2000/1500	6826	277/240	7.2		

Product Specifications & Dimensions

The entire heater casing shall be constructed of 6063 extruded Aluminum. minimum thickness of .100" (12 gauge) Aluminum shall be acceptable. Outlet grill shall cover entire length of air discharge opening and be constructed of steel. All casing and grill construction shall be painted with high quality durable powder coated paint.

The heating element shall be high quality Nichrome wire encased in Magnesium Oxide and sealed in copper tube. The heating element shall be sealed in .312" diameter Copper tube and be immersed in heat transfer liquid. Aluminum fins shall be mechanically bonded to the entire heated length of the element for even heat transfer.

Linear automatic thermal limit shall extend the entire heater length of element and protect heater in case of an over-temperature condition.

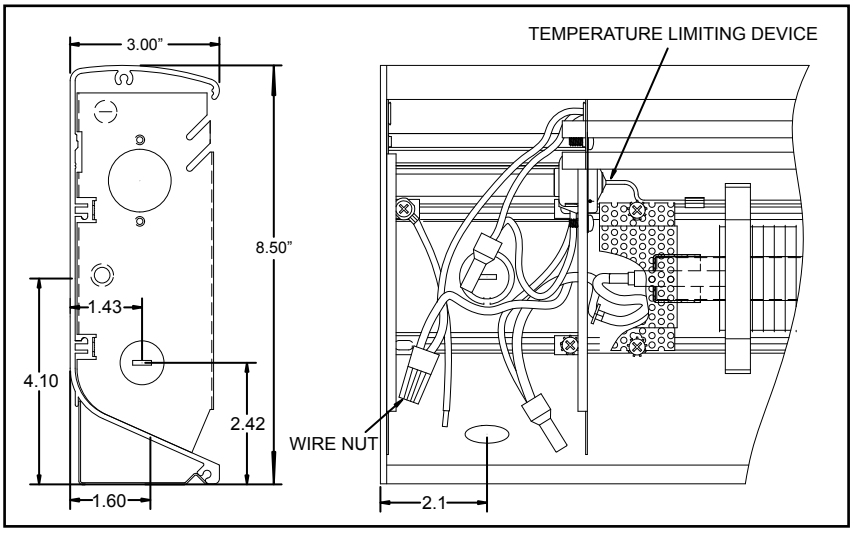

Optional controls shall be mounted in junction box enclosures at either end of heater. Optional integral thermostat shall be located in junction box with adjustment knob or for tamper-proof operation. Optional disconnect switch shall be mounted in junction box. Optional 120 Volt or air conditioning receptacle shall be mounted in junction box.

Optional installation accessories shall include inside and outside corner sections for complete wall perimeter fit. Profile of corners and grill shall have appearance of heat sections for continuous architectural design. Corner accessories and heater sections shall be secured by alignment pins for easy alignment of multiple heater applications.

- Available in white or brown with stainless steel heating element and aluminum fins.
- Powder coated 12 gauge heavy duty extruded Aluminum housing construction with junction boxes located on each end of the unit.
- An automatic thermal linear limit is used along the entire heated length of the unit.
- Wire guard extends along the entire outlet area of the baseboard.
- Special colors available, consult factory.
- Made in U.S.A.

Standard Models

STANDARD WHITE		COMMERCIAL BROWN		WATTS	BTUs	VOLTS	AMPS	HEATER LENGTH (IN.)	WT. (LBS)
MFG CATALOG NUMBER	MFG MODEL NUMBER	MFG CATALOG NUMBER	MFG MODEL NUMBER						
01160002	E3703-024	01164302	E3703-024B	375	1275	120	3.1	24	14
01160102	F3703-024	01164402	F3703-024B	375	1275	208	1.8		
01160202	H3703-024	01164502	H3703-024B	375 / 281	1275 / 955	240 / 208	1.6/1.4		
01160302	G3703-024	01164602	G3703-024B	375 / 281	1275 / 955	277 / 240	1.6/1.2		
01160402	E3705-028	01164702	E3705-028B	500	1706	120	4.2	28	16
01160502	F3705-028	01164802	F3705-028B	500	1706	208	2.4		
01160602	H3705-028	01164902	H3705-028B	500 / 375	1706 / 1275	240 / 208	2.1/1.8		
01160702	G3705-028	01165002	G3705-028B	500 / 375	1706 / 1275	277 / 240	1.8/1.6		
01160802	E3706-036	01165102	E3706-036B	600	2040	120	5	36	22
01160902	F3706-036	01165202	F3706-036B	600	2040	208	2.9		
01161002	H3706-036	01165302	H3706-036B	600 / 450	2040 / 1530	240 / 208	2.5/2.2		
01161102	G3706-036	01165402	G3706-036B	600 / 450	2040 / 1530	277 / 240	2.2/1.9		
01161202	E3707-040	01165502	E3707-040B	750	2550	120	6.3	40	27
01161302	F3707-040	01165602	F3707-040B	750	2550	208	3.6		
01161402	H3707-040	01165702	H3707-040B	750 / 563	2550 / 1914	240 / 208	3.1/2.7		
01161502	G3707-040	01165802	G3707-040B	750 / 563	2550 / 1914	277 / 240	2.7.2.6		
01161602	E3710-048	01165902	E3710-048B	1000	3413	120	8.3	48	31
01161702	F3710-048	01166002	F3710-048B	1000	3413	208	4.8		
01161802	H3710-048	01166102	H3710-048B	1000 / 750	3413 / 2550	240 / 208	4.2/3.6		
01161902	G3710-048	01166202	G3710-048B	1000 / 750	3413 / 2550	277 / 240	3.6/3.1		
01162002	G3707-048	01166302	G3707-048B	750	2550	277	3.4		
01162102	E3712-060	01166402	E3712-060B	1250	4250	120	10.4	60	33
01162202	F3712-060	01166502	F3712-060B	1250	4250	208	6		
01162302	H3712-060	01166602	H3712-060B	1250 / 938	4250 / 3189	240 / 208	5.2/4.5		
01162402	G3712-060	01166702	G3712-060B	1250 / 938	4250 / 3189	277 / 240	4.5/3.9		
01162502	G3709-060	01166802	G3709-060B	938	3189	277	3.4		
01162602	E3715-072	01166902	E3715-072B	1500	5100	120	12.5	72	41
01162702	F3715-072	01167002	F3715-072B	1500	5100	208	7.2		
01162802	H3715-072	01167102	H3715-072B	1500 / 1125	5100 / 3825	240 / 208	6.3/4.7		
01162902	G3715-072	01167202	G3715-072B	1500 / 1125	5100 / 3825	277 / 240	5.4/4.7		
01163002	G3711-072	01167302	G3711-072B	1125	3825	277	4.1		
01163102	F3717-084	01167402	F3717-084B	1750	5950	208	8.4	84	49
01163202	H3717-084	01167502	H3717-084B	1750 / 1313	5950 / 4464	240 / 208	7.3/6.3		
01163302	G3717-084	01167602	G3717-084B	1750 / 1313	5950 / 4464	277 / 240	6.3/5.5		
01163402	G3713-084	01167702	G3713-084B	1313	4464	277	4.7		
01163502	F3720-096	01167802	F3720-096B	2000	6826	208	9.6	96	58
01163602	H3720-096	01167902	H3720-096B	2000 / 1500	6826 / 5100	240 / 208	8.3/7.2		
01163702	G3720-096	01168002	G3720-096B	2000 / 1500	6826 / 5100	277 / 240	7.2/6.3		
01163802	G3715-096	01168102	G3715-096B	1500	5100	277	5.4		
01163902	F3725-120	01168202	F3725-120B	2500	8532	208	12	120	67
01164002	H3725-120	01168302	H3725-120B	2500 / 1875	8532 / 6375	240 / 208	10.4/9.0		
01164102	G3725-120	01168402	G3725-120B	2500 / 1875	8532 / 6375	277 / 240	9.0/7.8		
01164202	G3718-120	01168502	G3718-120B	1875	6375	277	6.8		

Note: Refer to 3900 Series for product dimension specifications.

Product Specifications

- The entire heater casing shall be constructed of 6063 extruded Aluminum. Minimum thickness of .100" (12 gauge) Aluminum shall be acceptable. Outlet grill shall cover entire length of air discharge opening and be constructed of steel. All casing and grill construction shall be painted with high quality durable powder coated paint.
- The heating element shall be high quality nichrome wire encased in Magnesium Oxide and sealed in a stainless steel tube.
- Linear automatic thermal limit shall extend the entire heater length of element and protect heater in case of an over-temperature condition.
- Optional controls shall be mounted in junction box enclosures at either end of heater. Optional integral thermostat shall be located in junction box with adjustment knob or for tamper-proof operation. Optional disconnect switch shall be mounted in junction box. Optional 120 Volt or air conditioning receptacle shall be mounted in junction box.
- Optional installation accessories shall include inside and outside corner sections for complete wall perimeter fit. Profile of corners and grill shall have appearance of heat sections for continuous architectural design. Corner accessories and heater sections shall be secured by alignment pins for easy alignment of multiple heater applications.

Field Installed Accessories

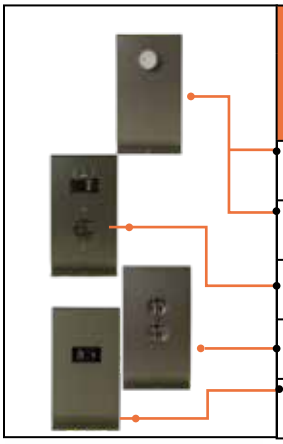

DESCRIPTION	Standard White		Commercial Brown	
	MFG CATALOG NUMBER	MFG MODEL NUMBER	MFG CATALOG NUMBER	MFG MODEL NUMBER
Single Pole, In-Built T-Stat, 22A @ 120-240V; 18A @ 277V; 0°-110° F	01118702	3900T1	01119502	3900T1C
Double Pole, In-Built T-Stat, 22A @ 120-240V; 18A @ 277V; 0°-110° F	01118802	3900T2	01119602	3900T2C
Air Conditioning Receptacle Section, 20 Amp @ 125-277V	01118902	3900AC	01119902	3900ACC
120V. Receptacle Section, 15 Amp	01119002	3900REC	01120002	3900RECC
Disconnect Switch, 20 Amp @ 125-277VAC; DPST	01119402	3900DS	01120402	3900DSC

Baseboard Sections

OUTSIDE CORNER

INSIDE CORNER

Outside and inside corner sections are 6" on longest side

STANDARD WHITE		COMMERCIAL BROWN		DESCRIPTION	
MFG CATALOG NUMBER	MFG MODEL NUMBER	MFG CATALOG NUMBER	MFG MODEL NUMBER	SECTION	SIZE
01121502	39BS28	0112215	39BS28C	Blank Section	28"
01121602	39BS36	0112222	39BS36C		36"
01121702	39BS48	0112239	39BS48C		48"
01121802	39BS60	0112246	39BS60C		60"
01121902	39BS72	0112253	39BS72C		72"
01122002	39BS96	0112260	39BS96C		96"
01150902	39BS120	0115100	39BS120C		120"
01119102	3900-ICS	0112017	3900-ICSC	Inside Corner	-
01119202	3900-OCS	0112024	3900-OCSC	Outside Corner	
01119302	3900-CS	01120302	3900-CSC	Control Section	4" Blank

Dimension

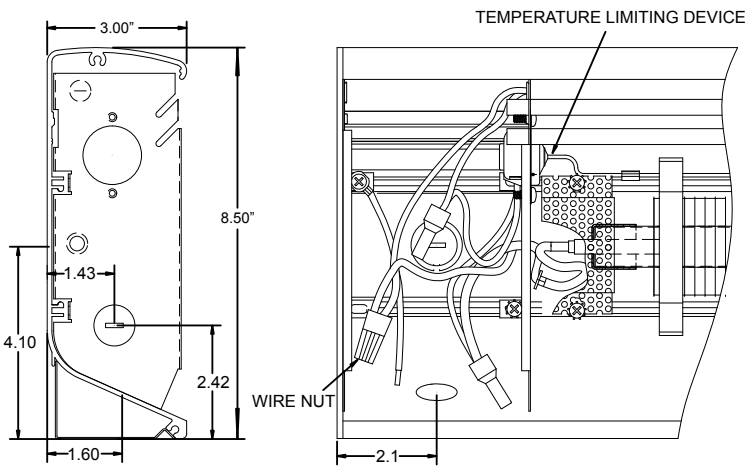

Wireway Covers (White Units Only)

MFG CATALOG NUMBER	MFG MODEL NUMBER	LENGTH	WT. (LBS)
01122802	3900WW28	28"	2
01122902	3900WW36	36"	2.5
01123002	3900WW48	48"	3.5
01123102	3900WW60	60"	4.5
01123202	3900WW72	72"	5.5
01123302	3900WW96	96"	7.5
01151102	3900WW120	120"	7.5

2900S Series Electric Baseboard - Stainless Steel Element Convection Heater

- Available in white or ivory with stainless steel heating element and Aluminum fins.
- Painted 22 gauge steel front with 20 gauge junction boxes located on each end of the heater - junction boxes contain quick connect cable clamps and 6"ground lead wires.
- Over-temperature thermal limit extends entire length of heated area.
- A full length wireway provided along the back of the heater - enclosed conduit available.
- Heater can be mounted to the wall by using the key hole knockouts every 4" at the back of the heater.
- Optional In-Built thermostats field installed in the junction box.
- For high altitude applications, delete the SW in the model number and add HAW
- Height: 6" Depth: 2 ½"
- Made in U.S.A.

Standard Models

IVORY		WHITE		WATTS	BTUs	VOLTS	AMPS	HEATER LENGTH (IN)	WT. (LBS)
MFG CATALOG NUMBER	MFG MODEL NUMBER	MFG CATALOG NUMBER	MFG MODEL NUMBER						
01043002	E2903-024S	01049902	E2903-024SW	375	1275	120	3.1	24	5
01043102	F2903-024S	01050002	F2903-024SW	375	1275	208	1.8		
01043202	H2903-024S	01050102	H2903-024SW	375 / 281	1275 / 955	240 / 208	1.6/1.4		
01043302	G2903-024S	01050202	G2903-024SW	375 / 281	1275 / 955	277 / 240	1.6/1.2		
01043402	E2905-028S	01050302	E2905-028SW	500	1706	120	4.2	28	6
01043502	F2905-028S	01050402	F2905-028SW	500	1706	208	2.4		
01043602	H2905-028S	01050502	H2905-028SW	500 / 375	1706 / 1275	240 / 208	2.1/1.8		
01043702	G2905-028S	01050602	G2905-028SW	500 / 375	1706 / 1275	277 / 240	1.8/1.6		
01043802	E2906-036S	01050702	E2906-036SW	600	2040	120	5	36	7
01043902	F2906-036S	01050802	F2906-036SW	600	2040	208	2.9		
01044002	H2906-036S	01050902	H2906-036SW	600 / 450	2040 / 1530	240 / 208	2.5/2.2		
01044102	G2906-036S	01051002	G2906-036SW	600 / 450	2040 / 1530	277 / 240	2.2/1.9		
01044202	E2907-040S	01051102	E2907-040SW	750	2550	120	6.3	40	8
01044302	F2907-040S	01051202	F2907-040SW	750	2550	208	3.6		
01044402	H2907-040S	01051302	H2907-040SW	750 / 563	2550 / 1914	240 / 208	3.1/2.7		
01044502	G2907-040S	01051402	G2907-040SW	750 / 563	2550 / 1914	277 / 240	2.7.2.6		
01044602	E2910-048S	01051502	E2910-048SW	1000	3413	120	8.3	48	10
01044702	F2910-048S	01051602	F2910-048SW	1000	3413	208	4.8		
01044802	H2910-048S	01051702	H2910-048SW	1000 / 750	3413 / 2550	240 / 208	4.2/3.6		
01044902	G2910-048S	01051802	G2910-048SW	1000 / 750	3413 / 2550	277 / 240	3.6/3.1		
01045002	G2907-048S	01051902	G2907-048SW	750	2550	277	3.4		
01045102	E2912-060S	01052002	E2912-060SW	1250	4250	120	10.4	60	12
01030002	F2912-060S	01052102	F2912-060SW	1250	4250	208	6		
01030102	H2912-060S	01052202	H2912-060SW	1250 / 938	4250 / 3189	240 / 208	5.2/4.5		
01030202	G2912-060S	01052302	G2912-060SW	1250 / 938	4250 / 3189	277 / 240	4.5/3.9		
01030302	G2909-060S	01052402	G2909-060SW	938	3189	277	3.4		
01030402	E2915-072S	01052502	E2915-072SW	1500	5100	120	12.5	72	14
01030502	F2915-072S	01052602	F2915-072SW	1500	5100	208	7.2		
01030602	H2915-072S	01052702	H2915-072SW	1500 / 1125	5100 / 3825	240 / 208	6.3/4.7		
01030702	G2915-072S	01052802	G2915-072SW	1500 / 1125	5100 / 3825	277 / 240	5.4/4.7		
01030802	G2911-072S	01052902	G2911-072SW	1125	3825	277	4.1		
01030902	F2917-084S	01053002	F2917-084SW	1750	5950	208	8.4	84	16
01031002	H2917-084S	01053102	H2917-084SW	1750 / 1313	5950 / 4464	240 / 208	7.3/6.3		
01031102	G2917-084S	01053202	G2917-084SW	1750 / 1313	5950 / 4464	277 / 240	6.3/5.5		
01031202	G2913-084S	01053302	G2913-084SW	1313	4464	277	4.7		
01031302	F2920-096S	01053402	F2920-096SW	2000	6826	208	9.6	96	18
01031402	H2920-096S	01053502	H2920-096SW	2000 / 1500	6826 / 5100	240 / 208	8.3/7.2		
01031502	G2920-096S	01053602	G2920-096SW	2000 / 1500	6826 / 5100	277 / 240	7.2/6.3		
01031602	G2915-096S	01053702	G2915-096SW	1500	5100	277	5.4		
01032102	F2925-120S	01054202	F2925-120SW	2500	8532	208	12	120	22
01032202	H2925-120S	01054302	H2925-120SW	2500 / 1875	8532 / 6375	240 / 208	10.4/9.0		
01032302	G2925-120S	01054402	G2925-120SW	2500 / 1875	8532 / 6375	277 / 240	9.0/7.8		
01032402	G2918-120S	01054502	G2918-120SW	1875	6375	277	6.8		

2900A Series - International Models

WHITE		WATTS	BTUs	VOLTS	HEATER LENGTH (IN)	WT. (LBS)
MFG CATALOG NUMBER	MFG MODEL NUMBER					
01157602	M2903-24AWi	375	1275	220	24"	10
01157702	H2903-24AWi			240		
01157802	M2905-28AWi	500	1706	220	28"	11
01159702	H2905-28AWi			240		
01158002	M2906-36AWi	600	2040	220	36"	11.5
01158102	H2906-36AWi			240		
01158202	M2907-40AWi	750	2550	220	40"	13
01158302	H2907-40AWi			240		
01158402	M2910-48AWi	1000	3413	220	48"	14
01158502	H2910-48AWi			240		
01158602	M2912-60AWi	1250	4250	220	60"	16
01158702	H2912-60AWi			240		
01158802	M2915-72AWi	1500	5100	220	72"	19
01158902	H2915-72AWi			240		
01159002	M2917-84AWi	1750	5950	220	80"	22
01180002	H2917-84AWi			240		
01180302	M2925-120AWi	2500	8532	220	120"	31
01180402	H2920-120AWi			240		

Note: Wireway length is the same as baseboard length.

2900C Series Electric Baseboard - Heavy Duty Commercial Convection Heater

Features

- Bankers bronze with stainless steel heating element and Aluminum fins.
- Powder coated 22 gauge steel front with 20 gauge junction boxes located on each end of the heater - junction boxes contain quick connect cable clamps and 6" ground lead wires.
- Standard inlet and outlet wire guards.
- Over-temperature thermal limit extends entire heated length of unit.
- A full length wireway provided along the back of the heater.
- Heater can be mounted to the wall by using the key hole knockouts every 4" at the back of the heater.
- Optional In-Built thermostats field installed in the junction box.
- Made in U.S.A. • Height: 6" Depth: 2 ½"

Standard Models

MFG CATALOG NUMBER	MFG MODEL NUMBER	WATTS	BTUs	VOLTS	AMPS	HEATER LENGTH (IN)	WT. (LBS)
01038302	E2903-024C	375	1275	120	3.1	24	5
01038402	F2903-024C	375	1275	208	1.8		
01038502	H2903-024C	375 / 281	1275 / 955	240 / 208	1.6 / 1.4		
01038602	G2903-024C	375 / 281	1275 / 955	277 / 240	1.6 / 1.2		
01038702	E2905-028C	500	1706	120	4.2	28	6
01038802	F2905-028C	500	1706	208	2.4		
01038902	H2905-028C	500 / 375	1706 / 1275	240 / 208	2.1 / 1.8		
01039002	G2905-028C	500 / 375	1706 / 1275	277 / 240	1.8 / 1.6		
01039102	E2906-036C	600	2040	120	5.0	36	7
01039202	F2906-036C	600	2040	208	2.9		
01039302	H2906-036C	600 / 450	2040 / 1530	240 / 208	2.5 / 2.2		
01039402	G2906-036C	600 / 450	2040 / 1530	277 / 240	2.2 / 1.9		
01039502	E2907-040C	750	2550	120	6.3	40	8
01039602	F2907-040C	750	2550	208	3.6		
01039702	H2907-040C	750 / 563	2550 / 1914	240 / 208	3.1 / 2.7		
01039802	G2907-040C	750 / 563	2550 / 1914	277 / 240	2.7 / 2.6		
01039902	E2910-048C	1000	3413	120	8.3	48	10
01040002	F2910-048C	1000	3413	208	4.8		
01040102	H2910-048C	1000 / 750	3413 / 2550	240 / 208	4.2 / 3.6		
01040202	G2910-048C	1000 / 750	3413 / 2550	277 / 240	3.6 / 3.1		
01040302	G2907-048C	750	2550	277	3.4		
01040402	E2912-060C	1250	4250	120	10.4	60	12
01040502	F2912-060C	1250	4250	208	6.0		
01040602	H2912-060C	1250 / 938	4250 / 3189	240 / 208	5.2 / 4.5		
01040702	G2912-060C	1250 / 938	4250 / 3189	277 / 240	4.5 / 3.9		
01040802	G2909-060C	938	3189	277	3.4		
01040902	E2915-072C	1500	5100	120	12.5	72	14
01041002	F2915-072C	1500	5100	208	7.2		
01041102	H2915-072C	1500 / 1125	5100 / 3825	240 / 208	6.3 / 4.7		
01041202	G2915-072C	1500 / 1125	5100 / 3825	277 / 240	5.4 / 4.7		
01041302	G2911-072C	1125	3825	277	4.1		
01041402	F2917-084C	1750	5950	208	8.4	84	16
01041502	H2917-084C	1750 / 1313	5950 / 4464	240 / 208	7.3 / 6.3		
01041602	G2917-084C	1750 / 1313	5950 / 4464	277 / 240	6.3 / 5.5		
01041702	G2913-084C	1313	4464	277	4.7		
01041802	F2920-096C	2000	6826	208	9.6	96	18
01041902	H2920-096C	2000 / 1500	6826 / 5100	240 / 208	8.3 / 7.2		
01042002	G2920-096C	2000 / 1500	6826 / 5100	277 / 240	7.2 / 6.3		
01042102	G2915-096C	1500	5100	277	5.4		
01042602	F2925-120C	2500	8532	208	12.0	120	22
01042702	H2925-120C	2500 / 1875	8532 / 6375	240 / 208	10.4 / 9.0		
01042802	G2925-120C	2500 / 1875	8532 / 6375	277 / 240	9.0 / 7.8		
01042902	G2918-120C	1875	6375	277	6.8		

International Models

MFG CATALOG NUMBER	MFG MODEL NUMBER	WATTS	BTUs	VOLTS	AMPS	HEATER LENGTH (IN)	WT. (LBS)
01180502	M2903-024CI	375	1275	220	1.7	24	5
01180602	H2903-024CI			240	240		
01180702	M2905-028CI	500	1706	220	2.3	28	6
01180802	H2905-028CI			240	2.1		
01180902	M2906-036CI	600	2040	220	2.7	36	7
01181002	H2906-036C			240	2.5		
01181102	M2907-040CI	750	2550	220	3.4	40	8
01181202	H2907-040C			240	3.1		
01181302	M2910-048CI	1000	3413	220	4.6	48	10
01181402	H2910-048CI			240	4.2		
01181502	M2912-060CI	1250	4250	220	5.7	60	12
01181602	H2912-060C			240	5.2		
01181702	M2915-072CI	1500	5100	220	6.8	72	14
01181802	H2915-072CI			240	6.3		
01181902	M2917-084CI	1750	5950	220	8.0	84	16
01182002	H2917-084CI			240	7.3		
01182102	M2920-096CI	2000	6826	220	9.1	96	18
01182202	H2920-096CI			240	8.3		
01182302	M2925-120CI	2500	8532	220	11.4	120	22
01182402	H2925-120CI			240	10.4		

In-Built Thermostat Kits

MFG CATALOG NUMBER	MFG MODEL NUMBER	DESCRIPTION	WT. (LBS)
01054602C	TBS	SPST-In-Built 22A @ 120-240V 18A @ 277V (0°-$110F^{o}$)	½
01054702C	TBD	DPST-In-Built 22A @ 120-240V 18A @ 277V (0°-$110F^{o}$)	½

*Junction box covers supplied with baseboard heater will work in conjunction with in-built thermostat kits.

Field Installed Accessories

DESCRIPTION	IVORY		WHITE		BANKERS BRONZE		WT. (LBS)
	MFG CATALOG NUMBER	MFG MODEL NUMBER	MFG CATALOG NUMBER	MFG MODEL NUMBER	MFG CATALOG NUMBER	MFG MODEL NUMBER	
Disconnect Switch, 20 Amp, 120-277V	01061002	DS	01061102	DSW	01061202	DSB	1
Corner Sections	01054902	CS	01055002	CSW	01055102	CSB	
1” Joiner Kits	01055202	JK	01055302	JKW	01055402	JKB	¼
6” Blank Relay Section (Relay Not Included)**	01055502	LVRS	01055602	LVRSW	01055702	LVRSB	1 ½
Receptacle Section (Baseboard Mounted) 15 Amp 120 VAC	01055802	BDR115	01055902	BDR115W	01056002	BDR115B	¼
Receptacle Section (Mounted in 6” Blank) 15 Amp 120 VAC	01056102	DR115	01056202	DR115W	01056302	DR115B	2
Transfer Switch (Mounted in 6” Blank) 16 Amp 120 VAC	01056402	SR120	01056502	SR120W	01056602	SR120B	
Transfer Switch (Mounted in 6” Blank) 16 Amp 240 VAC	01056702	SR220	01056802	SR220W	01056902	SR220B	

**Not for use with 24A06G-1 relay.

Optional Wireway Covers

MFG CATALOG NUMBER	MFG MODEL NUMBER	LENGTH (in.)	COVER LENGTH (in.)	WT. (LBS)
01057002	WWA01	24”	20	1
01057102	WWA02	28”	24	1.5
01057202	WWA03	36”	32	2
01057302	WWA04	40”	36	2.5
01057402	WWA05	48”	44	3
01057502	WWA06	60”	56	4
01057602	WWA07	72”	68	5
01057702	WWA08	84”	80	6
01057802	WWA09	96”	92	7
01057902	WWA00	120”	116	8

Blank Sections

LENGTH	IVORY		WHITE		BANKERS BRONZE		WT. (LBS)
	MFG CATALOG NUMBER	MFG MODEL NUMBER	MFG CATALOG NUMBER	MFG MODEL NUMBER	MFG CATALOG NUMBER	MFG MODEL NUMBER	
24”	01058002	BBS024A	01059002	BBS024AW	01060002	BBS024C	5
28”	01058102	BBS028A	01059102	BBS028AW	01060102	BBS028C	5 ½
36”	01058202	BBS036A	01059202	BBS036AW	01060202	BBS036C	6
40”	01058302	BBS040A	01059302	BBS040AW	01060302	BBS040C	7
48”	01058402	BBS048A	01059402	BBS048AW	01060402	BBS048C	8
60”	01058502	BBS060A	01059502	BBS060AW	01060502	BBS060C	10
72”	01058602	BBS072A	01059602	BBS072AW	01060602	BBS072C	12
84”	01058702	BBS084A	01059702	BBS084AW	01060702	BBS084C	15
96”	01058802	BBS096A	01059802	BBS096AW	01060802	BBS096C	17
120”	01058902	BBS120A	01059902	BBS120AW	01060902	BBS120C	20